IR**PLP** 40.0

HYDRAULIC WORK SUPPORT WITH **LOWER FLANGE**

MAX. OPERATING PRESSURE = **500**BAR - MIN. OPERATING PRESSURE = **100**BAR

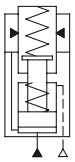

A : Clamping

B : Venting

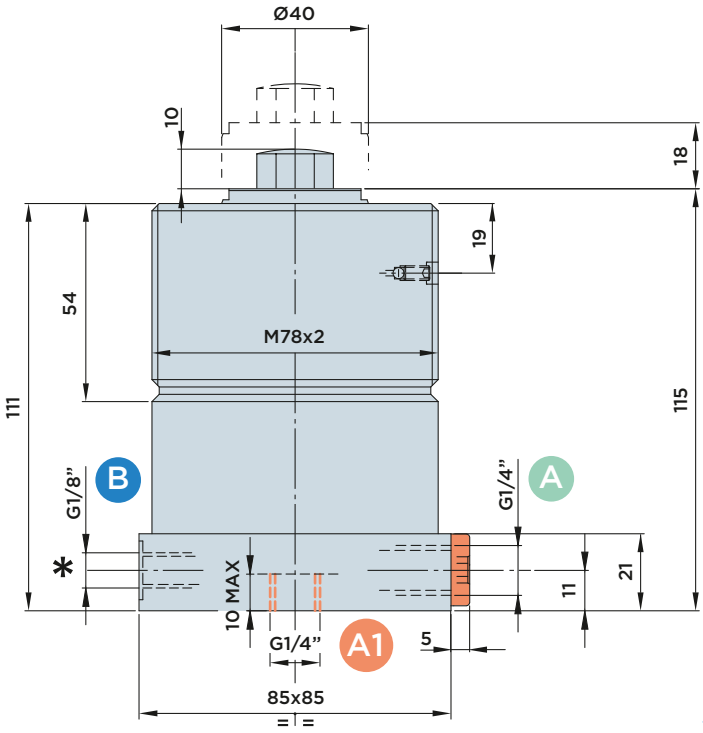

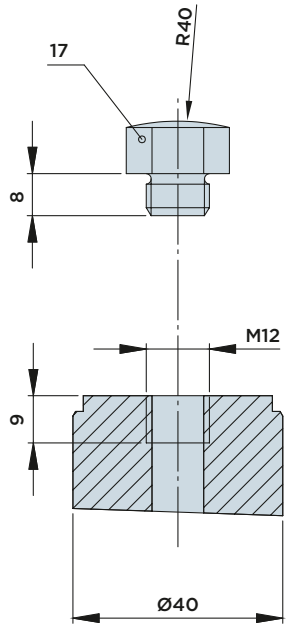

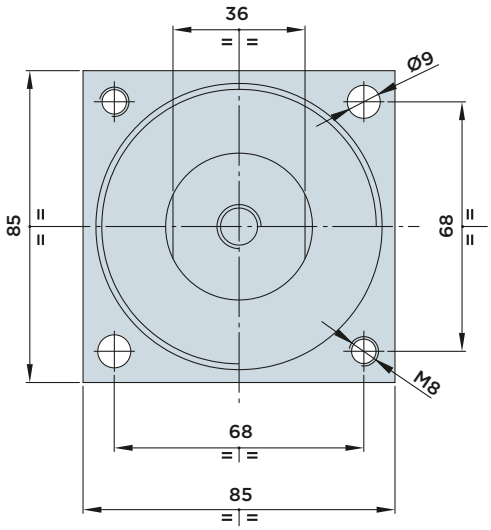

FORCE/PRESSURE/DEFLECTION DIAGRAM

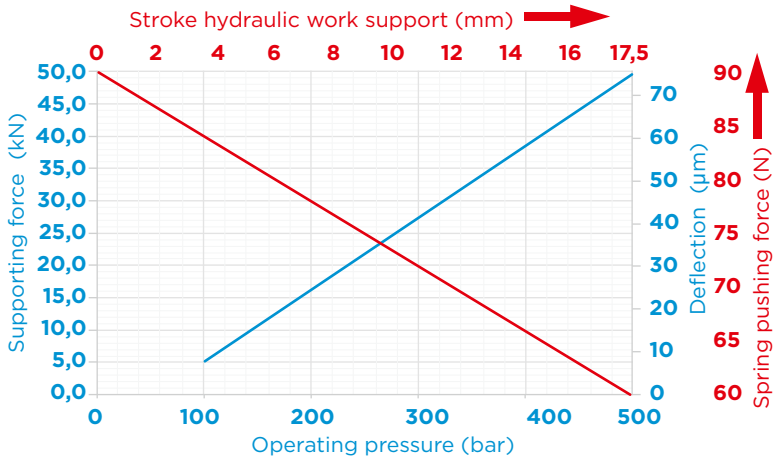

* The B port is delivered with a sintered integrated filter in the standard version.

Note:
Cylinder capacity 5.6 cm³
The maximum admissible flow rate amounts to 1.5 l/min.
For example of the graph, see Pag.344

Contact force:
- Standard 60÷90 N

A1 A version with A1 port at the bottom of the flange is available upon request (order no. IRPLP40.1). In this case, the A port is closed by means of a plug.

Included in the scope of supply:
- Mounting screws M8x35 DIN912/12.9 grade

Material:
- Piston/rod: Case-hardened steel, ground.
- Body: Free machining steel, nitrocarburized.

IR**PLM** 40.0

HYDRAULIC WORK SUPPORT WITH **LOWER FLANGE**

MAX. OPERATING PRESSURE = **500**BAR - MIN. OPERATING PRESSURE = **100**BAR

A : Clamping

B : Venting

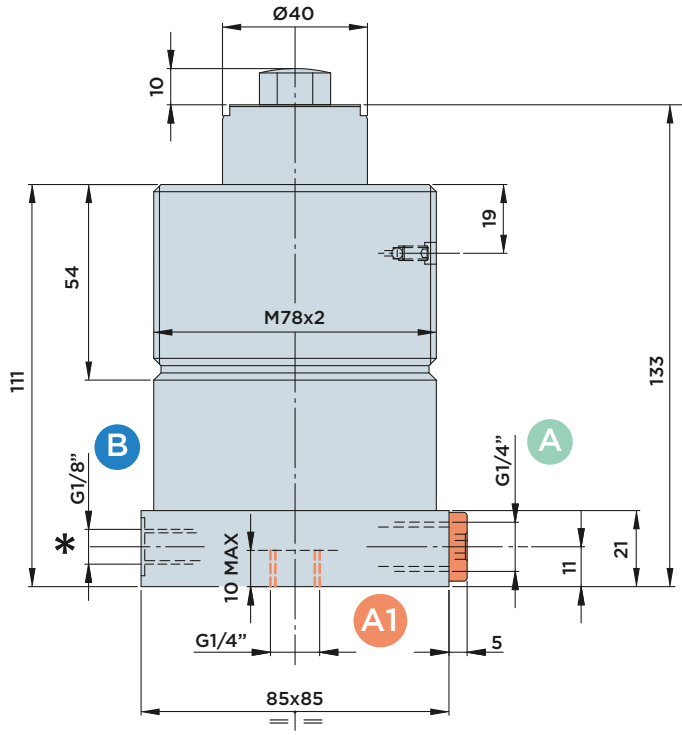

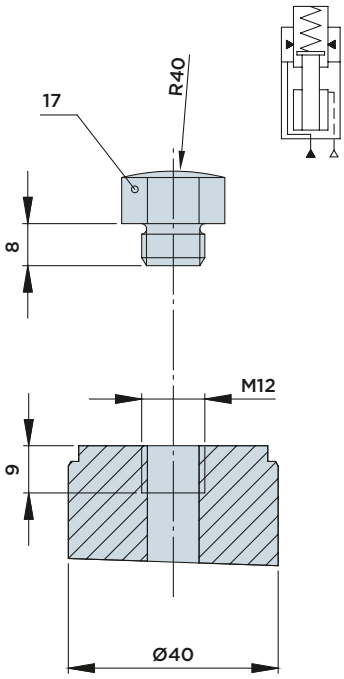

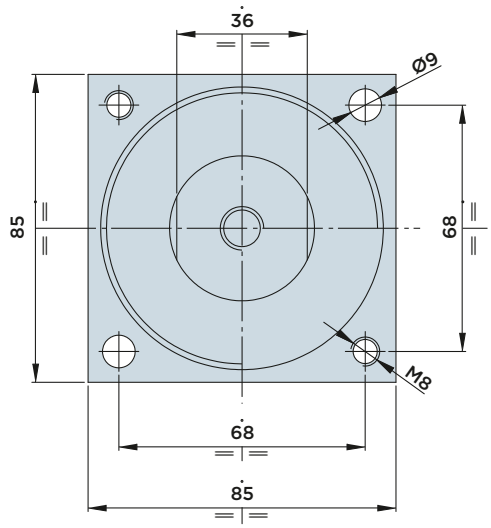

FORCE/PRESSURE/DEFLECTION DIAGRAM

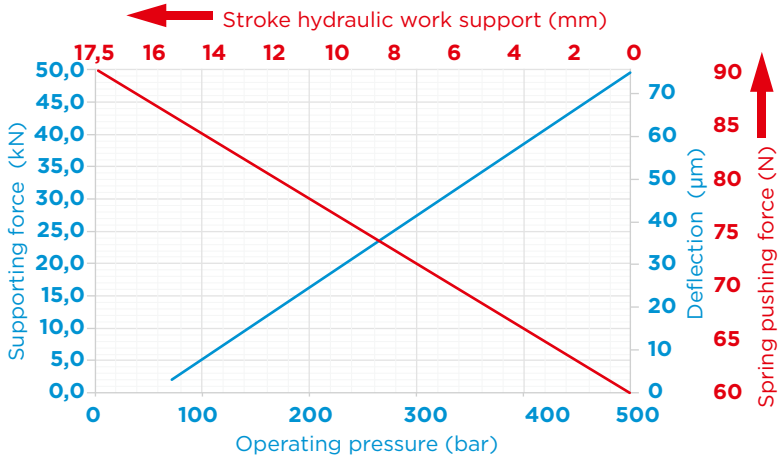

* The B port is delivered with a sintered integrated filter in the standard version.

Note:
The maximum admissible flow rate amounts to 1.5 l/min.
For example of the graph, see Pag.344

Contact force:
- Standard 60÷90 N

Included in the scope of supply:
- Mounting screws M8x35 DIN912/12.9 grade

Material:
- Piston/rod: Case-hardened steel, ground.
- Body: Free machining steel, nitrocarburized.

A1 A version with A1 port at the bottom of the flange is available upon request (order no. IRFL40.1). In this case, the A port is closed by means of a plug.