CG12.200 **CD**

DOUBLE-ACTING **LINK CLAMP CYLINDER**

MAX. OPERATING PRESSURE = 200BAR

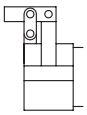

A : Clamping

B : Unclamping

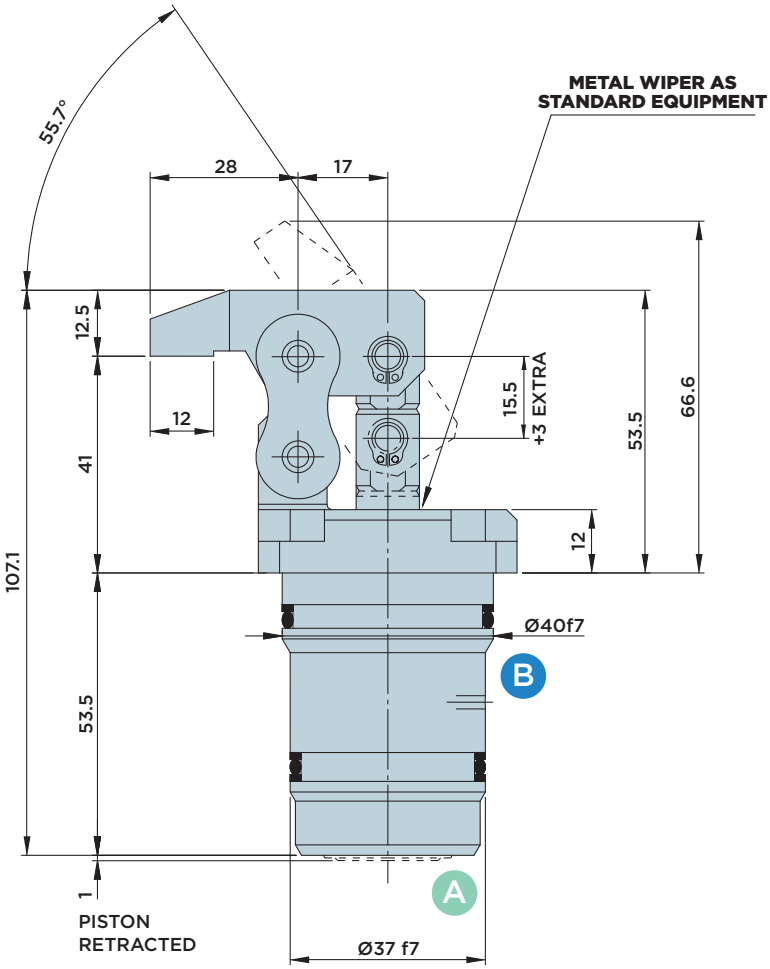

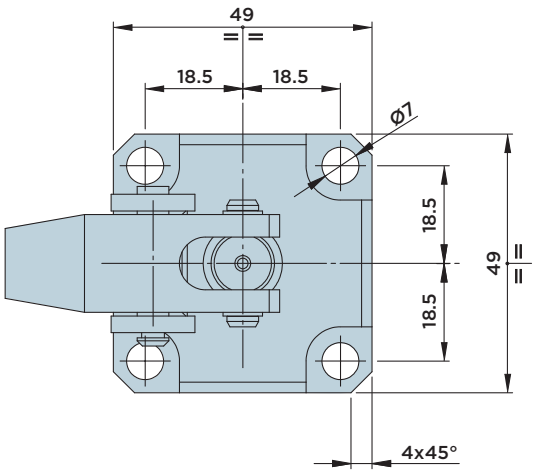

INSTALLATION DIMENSIONS

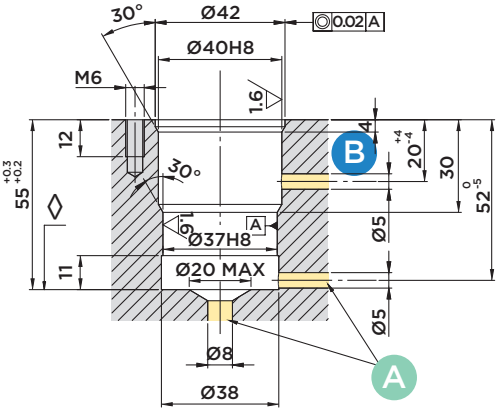

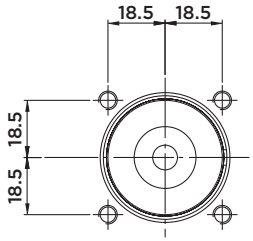

◊ Piston contact surface

Included in the scope of supply:
- Mounting screws M6x16 DIN 912/12.9 grade

Material:
- Piston/rod/bolts: Case-hardened steel, ground.
- Body: Free machining steel, nitrocarburized.
- Lever: Quenched and Tempered steel.
- Clamp arm: C45.

Options:
- Upon request, different clamp arm types can be manufactured to customer specification, mounted and commissioned.
- The link clamp cylinder can also be ordered without clamp arm (order no. CG12.200CDN).

STROKE mm		EFFECTIVE PISTON AREA		TOTAL OIL VOLUME	
		Cm^2		Cm^3	
		CLAMP.	UNCLAMP.	CLAMP.	UNCLAMP.
TOTAL	18.5	4.91	3.78	9.1	7