CG12.250 **CD**

DOUBLE-ACTING **LINK CLAMP CYLINDER**

MAX. OPERATING PRESSURE = 250BAR

A : Clamping

B : Unclamping

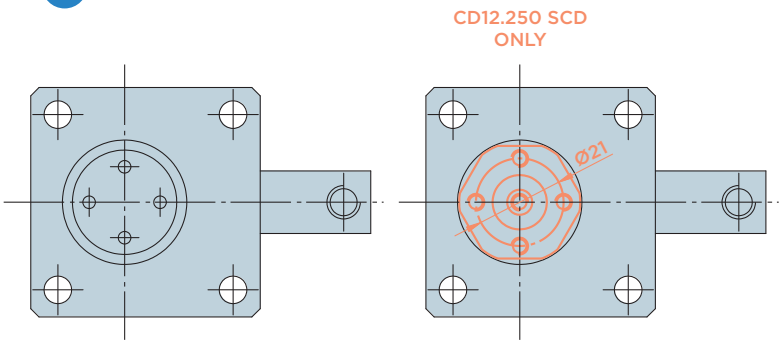

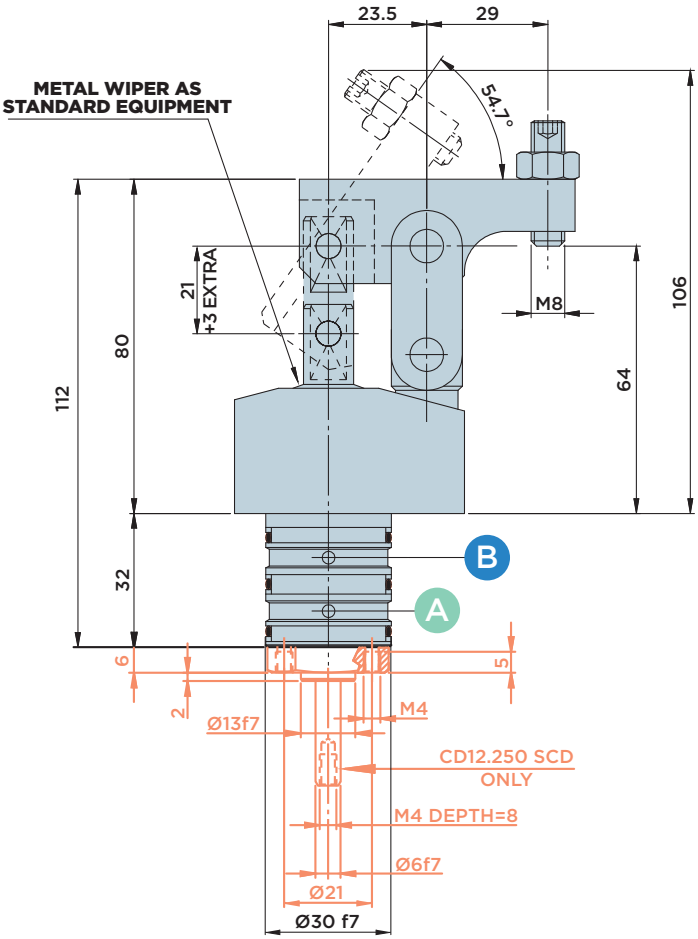

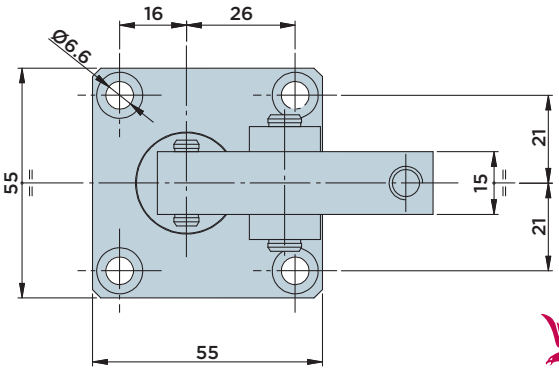

INSTALLATION DIMENSIONS

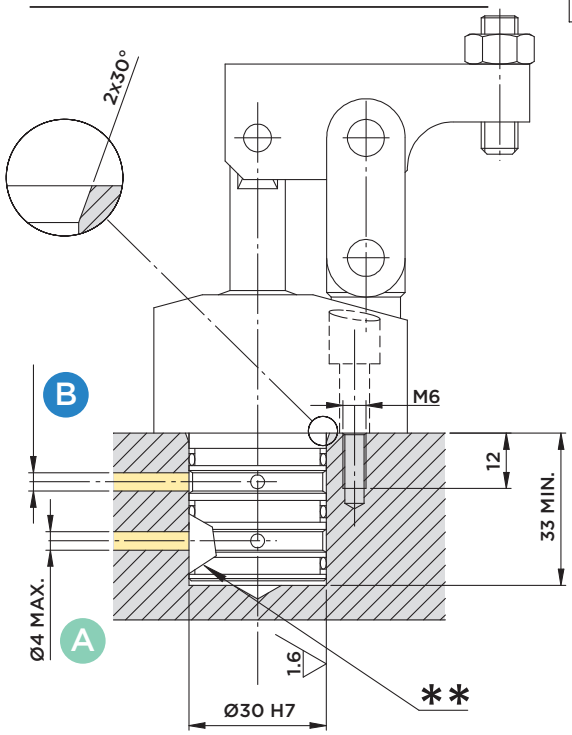

** Debur and round off any edges

Included in the scope of supply:
- Mounting screws M6x25 DIN 912/12.9 grade.

Material:
- Piston/rod/bolts: Case-hardened steel, ground.
- Body: Free machining steel, nitrocarburized.
- Lever: Quenched and Tempered steel.
- Clamp arm: C45.

Options:
- Upon request, different clamp arm types can be manufactured to customer specification, mounted and commissioned.
- The link clamp cylinder can also be ordered without clamp arm (order no. CG12.250CDN).
- The cylinder is also available with position control sensor (order no. CG12.250SCD).
- The cylinder can also be ordered with position control sensor but without clamp arm (order no. CG12.250SCDN).

STROKE mm		EFFECTIVE PISTON AREA		TOTAL OIL VOLUME	
		Cm²		Cm³	
		CLAMP.	UNCLAMP.	BLOCC.	CLAMP.
TOTAL	24	2.01	0.88	4.8	2.1

CG12.250 **FD**

DOUBLE-ACTING **LINK CLAMP CYLINDER**

MAX. OPERATING PRESSURE = 250BAR

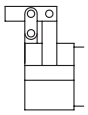

A : Clamping

B : Unclamping

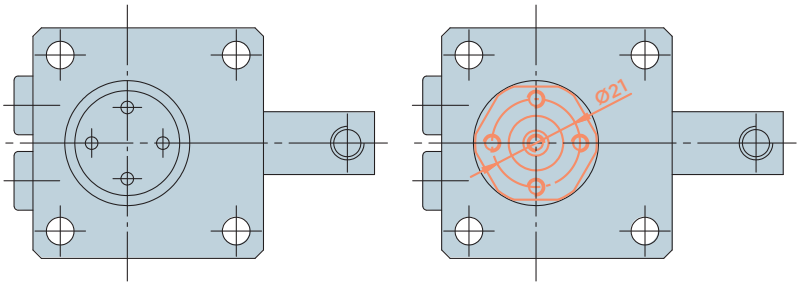

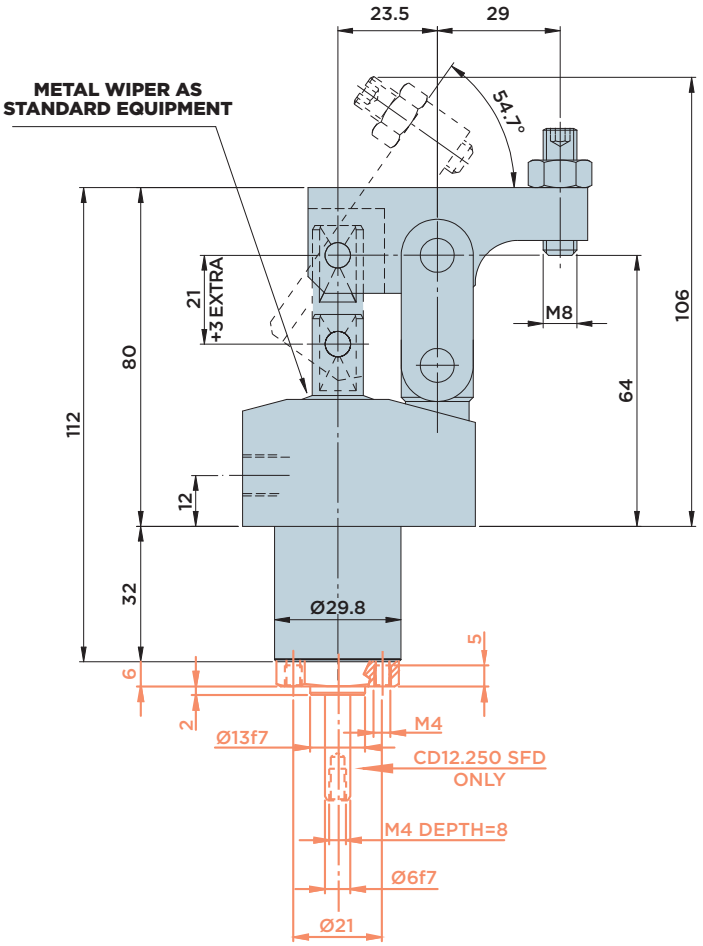

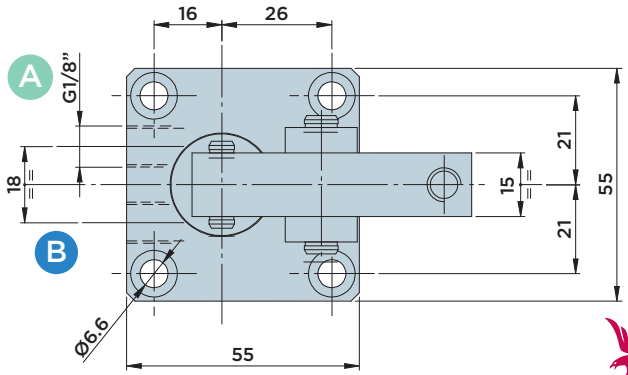

INSTALLATION DIMENSIONS

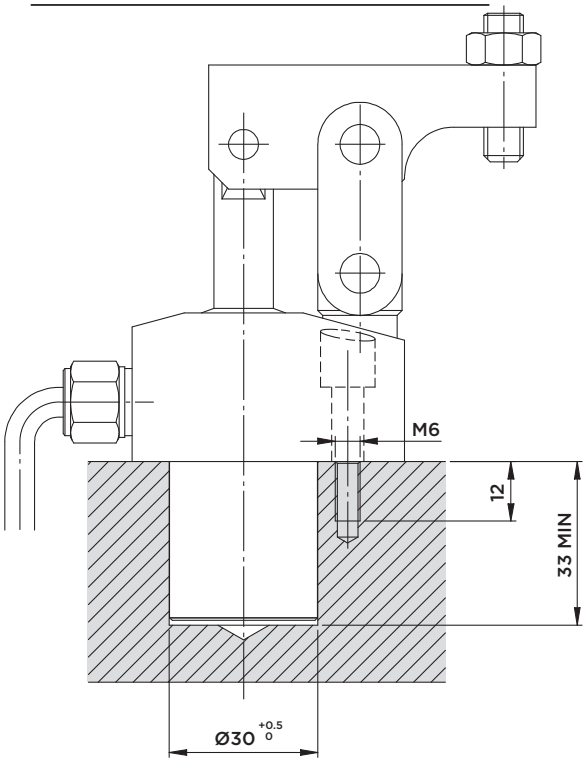

Included in the scope of supply:

- Mounting screws M6x25 DIN 912/12.9 grade.

Material:

- Piston/rod/bolts: Case-hardened steel, ground.
- Body: Free machining steel, nitrocarburized.
- Lever: Quenched and Tempered steel.
- Clamp arm: C45.

Options:

- Upon request, different clamp arm types can be manufactured to customer specification, mounted and commissioned.
- The link clamp cylinder can also be ordered without clamp arm (order no. CG12.250FDN).
- The cylinder is also available with position control sensor (order no. CG12.250SFD).
- The cylinder can also be ordered with position control sensor but without clamp arm (order no. CG12.250SFDN).

STROKE mm		EFFECTIVE PISTON AREA		TOTAL OIL VOLUME	
		Cm^2		Cm^3	
		CLAMP.	UNCLAMP.	CLAMP.	UNCLAMP.
TOTAL	24	2.01	0.88	4.8	2.1

CG12.250 **FM**

DOUBLE-ACTING **LINK CLAMP CYLINDER**

MAX. OPERATING PRESSURE = 250BAR

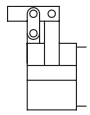

A : Clamping

B : Unclamping

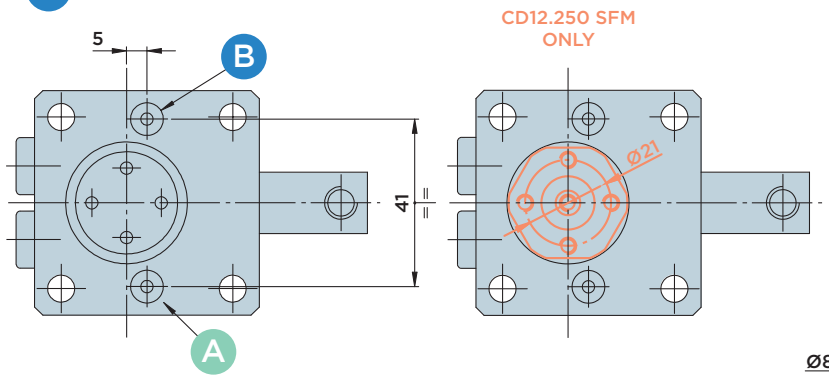

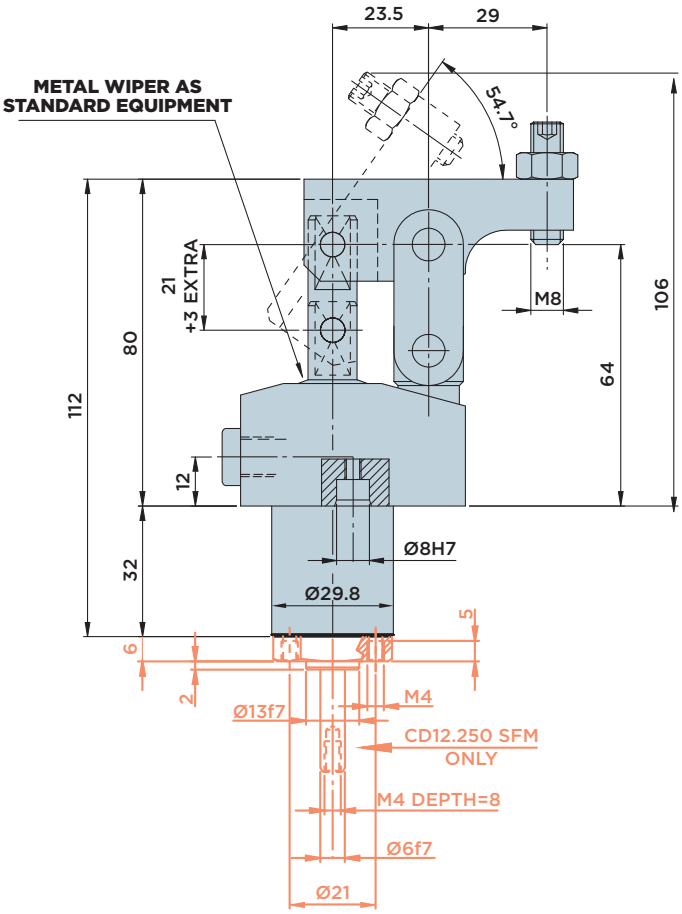

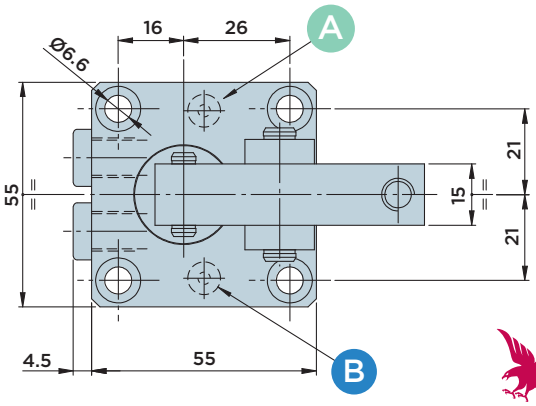

INSTALLATION DIMENSIONS

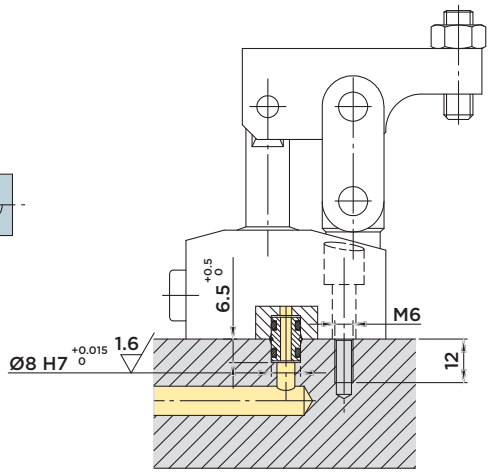

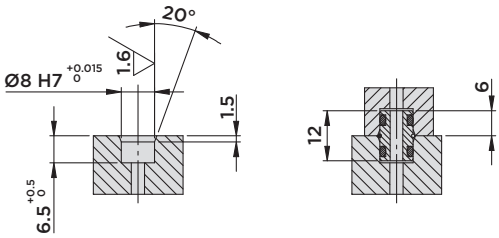

Included in the scope of supply:
- Mounting screws M6x25 DIN 912/12.9 grade.
- Hydraulic plug connector Ø8x12.

Material:
- Piston/rod/bolts: Case-hardened steel, ground.
- Body: Free machining steel, nitrocarburized.
- Lever: Quenched and Tempered steel.
- Clamp arm: C45.

Options:
- Upon request, different clamp arm types can be manufactured to customer specification, mounted and commissioned.
- The link clamp cylinder can also be ordered without clamp arm (order no. CG12.250FMN).
- The cylinder is also available with position control sensor (order no. CG12.250SFM).
- The cylinder can also be ordered with position control sensor but without clamp arm (order no. CG12.250SFMN).

STROKE mm		EFFECTIVE PISTON AREA		TOTAL OIL VOLUME	
		Cm²		Cm³	
		CLAMP.	UNCLAMP.	CLAMP.	UNCLAMP.
TOTAL	24	2.01	0.88	4.8	2.1

HYDROBLOCK